Fire Pump Controller

For Electric Motor Driven Fire Pumps

Solid State
Reduced Voltage Types

Series MP700
Soft Start, Soft Stop

Metron Fire Pump Controllers conform to the latest requirements of Chapter 10, National Fire Protection Association Pamphlet 20, Standard for Centrifugal Fire Pumps as adopted by Underwriters Laboratories and Factory Mutual.

Sizes range from 15 to 600 horsepower, 200 to 600 volts, 60 Hz. These controllers are used on reduced voltage type installations using a solid state starter for “Soft” starting and “Soft” stopping of electric motors.

Only the highest quality components, all UL listed or UL recognized, are used throughout to assure the best possible reliability. The cabinet is fabricated of heavy gauge reinforced steel with drip-proof hood. All field wiring and service connections may be made from the front, allowing the controller to be mounted flush against a wall.

The controller is completely wired, assembled, and tested at the factory before shipment, and ready for immediate installation.

MP700 Fire Pump Controller

c UL us LISTED

FM APPROVED

NEMA MEMBER

Standard and Optional Features

Standard Features

Function - The MP700 series Soft Start electric fire pump controllers utilizes a state of the art solid state motor controller. The motor voltage is raised to an initial torque value. This is an adjustable value of locked rotor torque. The motor voltage is gradually increased during the acceleration ramp time. The acceleration ramp time is set to 10 seconds as required by NFPA 20, but it is adjustable from approximately 3 to 30 seconds.

After a minimum run period and all starting causes have returned to normal, the solid state controller will initiate a stop sequence. This function will reduce surges in the pumping system during stopping of a centrifugal pump by smoothly decelerating the motor at a selectable rate. This will reduce the possibility of surges occurring in the system.

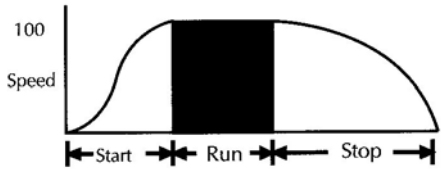

Operator Interface Device (OID) with LED Annunciator and Digital Display

- The solid state unit is supplied with the following protection features: Instantaneous Overcurrent Detection; Shorted SCR Detection; Phase Loss Monitor; Heatsink Over Temperature Switch
- NEMA Type 2 drip proof metal freestanding enclosure
- Operator Interface Device (OID) with 4 lines by 20 character display with large character backlit Liquid Crystal Display (LCD) capable of being read in both direct sunlight or dark lighting conditions
- 10 pushbuttons for easy screen navigation, LED lamp test, alarm reset, controller test and horn silencing
- Removable labels to allow for easy field language changes
- All controller settings are programmable through the OID. All features are enabled or disabled through the OID, no jumpers or external wires are needed allowing easy field modification
- The system status data is displayed on the OID. The displayed items include: System pressure, Phase to Phase (AB, BC, AC) voltage, Phase current (A, B, C), Current time and date, System Events and Notifications such as Remote Start, Local Start etc., Number of starts, Total motor run hours, Time remaining on sequential motor start and motor stop timers, Status of automatic stop setting.
- Auxiliary alarm functions displayed on the OID LCD screen
- Audible horn with silence feature for silencable alarms
- Lamp test feature
- Foreign languages selectable through the OID
- Microprocessor based logic with real time/date clock capable of running a minimum of 14 days without AC power connected to controller
- SD Memory card used to record pressure log, event and log, and auxiliary user programs. Pressure log is stored in separate comma delimited ASCII text files with each file containing data for one day. The SD card is removable and can be read by any PC equipped with an SD card reader.
- Input and output status LED's provide visual indication of each discrete input's or output's on/off status
- RS485 Communications Port
- MODBUS Communication Protocol via RS485 port
- Service Entrance Rated

Standard Auxiliary alarms:
The controller includes as standard six (6) discrete auxiliary inputs, nine (9) form 'C' auxiliary relay outputs. These auxiliary inputs and outputs are in addition to those mandated by NFPA 20. All auxiliary inputs, outputs, and OID Display can be field programmed through the OID.

All photographs and graphics are typical and may not represent actual product supplied

Nine (9) of the following auxiliary alarms can be programmed and recorded in the event/alarm logs and annunciated on the OID display screen and/or output relay contact(s). These alarm conditions include:

LOW PUMP ROOM TEMP
RESERVOIR LOW
RESERVOIR EMPTY
RESERVOIR HIGH
FLOW METER ON
RELIEF VALVE OPEN
LOW SUCTION PRESSURE
HIGH PUMP ROOM TEMPERATURE
LOW FIREWATER PRESSURE
LOW PURGE PRESSURE
LOW GEAR OIL PRESSURE
HIGH GEAR OIL TEMPERATURE
GAS DETECTION
HIGH VIBRATION
EMERGENCY POWER ON
PUMP ROOM DOOR OPEN

Data logging: The controller includes two (2) separate data logs for storing system data that is readable through the OID or copied to a computer equipped with an SD card reader. The 2 data logs are as follows:

Pressure Log: The pressure log provides a continuous pressure record for 30 days. The pressure log samples shall be time and date stamped and stored in permanent non-volatile SD memory card. The pressure log can be searched by each sample, by minute, or by hour through the OID.

Event Log: The event log will store up to 300 of the most current events. These events can include, but is not limited to, any of the following events/alarms:

PUMP RUNNING
POWER AVAILABLE
PHASE REVERSAL
MOTOR OVERLOAD
REMOTE START
LOCAL START
PUMP ON DEMAND
SYSTEM FAULT
PRESSURE TRANSDUCER FAULT
PUMP FAILED TO START
LOW INTAKE SHUTDOWN ALARM
SUPERVISORY POWER FAILURE
LOW PRESSURE
AUTO WEEKLY TEST START
UNDER FREQUENCY
OVER FREQUENCY
LOW ZONE / HIGH ZONE CONTACTS
HIGH DISCHARGE PRESSURE
NO LOAD CONDITION

Options

Option H: Space Heater
If the ambient atmosphere is especially damp, a space heater rated at 100 watts may be supplied to reduce moisture in the cabinet. A thermostat is supplied as standard with this option. A humidistat may be substituted if specified.

Option T: Weekly Test Start Solenoid
In some cases it may be desirable to have the electric motor run at a preset time each week for approximately 30 minutes. The controller includes a built in weekly test function. This option complements the standard function by simulating a loss of pressure. Simulation of pressure loss is accomplished by opening a solenoid valve, which reduces the system pressure below the starting pressure of the controller.

Option W: Omit Legs
For systems where the controller is mounted on a common skid with the pump and motor, the legs of the controller may be omitted, 3" (76.2mm) channels or wall mounting brackets can be supplied. If specified, lifting eyes may also be supplied.

Enclosure
The following NEMA type enclosures are also available: 3R, 4, 4X (Painted Cold Rolled Steel), 4X (304 or 316 Stainless Steel), and 12

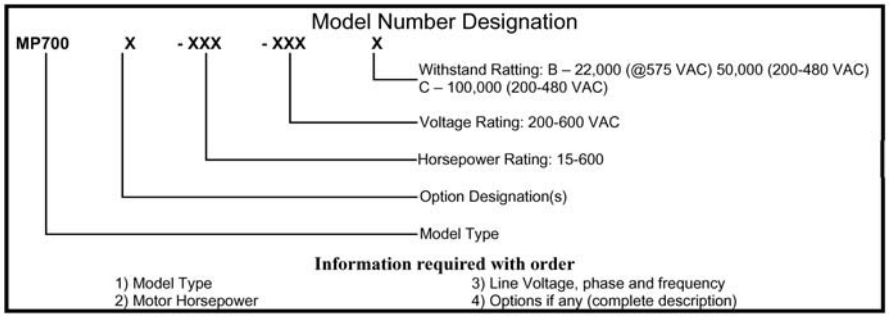

Standard Withstand Ratings: Model MP700

200-208 Volts	15-150 HP	—	100kA RMS Symmetrical
220-240 Volts	15-200 HP	—	100kA RMS Symmetrical
380-415 Volts	15-300 HP	—	100kA RMS Symmetrical
460-480 Volts	15-400 HP	—	100kA RMS Symmetrical
200-208 Volts	200-250 HP	—	50kA RMS Symmetrical
220-240 Volts	250-300 HP	—	50kA RMS Symmetrical
380-415 Volts	350-350 HP	—	50kA RMS Symmetrical
460-480 Volts	500-600 HP	—	50kA RMS Symmetrical
550-600 Volts	15-400 HP	—	22kA RMS Symmetrical

Fire Pump Controller

For Electric Motor Driven Fire Pumps

Model MP700 Soft Start/Soft Stop Microprocessor Electric Motor Fire Pump Controller

Specifications

The Fire Pump Controller shall be factory assembled, wired and tested as a unit and shall conform to all requirements of the latest edition of NFPA 20, NFPA 70 and be Third Party Listed by Underwriters Laboratories (UL) and Approved by Factory Mutual (FM). The controller shall be available for 208, 230, 380-415, or 480 volt three phase power.

Controller Equipment Features

The controller shall include the following standard features:

- NEMA Type 2 drip proof metal freestanding enclosure
- The controller shall be designed for Soft Start starting and shall incorporate a special Pump Control feature which eliminates excessive acceleration torque problems (water hammer) and related effects. The controller shall stop the motor by reducing the speed in a manner that prevents any sudden changes in torque and minimizes surges in the system resulting in a smooth deceleration to the pump
- Operator Interface Device (OID) with 4 lines by 20 character display with large character backlit LCD capable of being read in both direct sunlight or dark lighting conditions
- 10 pushbuttons for easy screen navigation, system test, lamp test, alarm reset, and horn silencing
- Multicolored LED's for alarm and mode annunciation
- LEDs shall be labeled with removable labels to allow for easy field modification of language changes
- All controller settings shall be programmable through the OID and shall be protected by two password levels
- All features shall be enabled or disabled through the OID, no jumpers or external wires shall be needed or allowed to activate or de-activate a feature
- The system status data shall be displayed on the OID. The displayed items shall include: System pressure, Phase to Phase (AB, BC, AC) voltage, Phase current (A, B, C), System Events and Notifications, Current time and date, Number of starts, Total motor run hours, Displayed countdown timers for: Sequential motor start and motor stop, Status of Automatic Stop Setting
- Audible horn with silence feature for silencable alarms
- Lamp test feature
- Foreign languages selectable through the OID
- Microprocessor based logic with real time/date clock capable of running a minimum of 14 days without AC power connected to controller and non-volatile flash memory to permanently store the continuous pressure log, event log, alarm log and all user changeable set points and system data. Battery backup of any kind not allowed
- Input and output status LED's to provide visual indication of each discrete input's or output's on/off status
- RS485 Communications Port
- MODBUS Communication Protocol via RS485 port
- All wiring terminals on PCB's shall be removable type
- Service Entrance Rated

Auxiliary alarms

As standard the controller shall include 6 discrete auxiliary inputs, 9 form 'C' auxiliary relay outputs. These auxiliary inputs and outputs are in addition to those mandated by NFPA 20. All auxiliary inputs, outputs, and OID screens shall be field programmable through the OID. This permits a multitude of customizable controller configurations to meet each installations unique needs without adding cost to the controller. The use of jumpers, soldering, or other external components are not allowed.

The user can select any 9 of the following auxiliary alarms that can be programmed and recorded in the event log and annunciated with an OID screen and output relay contact for conditions such as but not limited to:

LOW PUMP ROOM TEMP
RESERVOIR LOW
RESERVOIR EMPTY
RESERVOIR HIGH
FLOW METER ON
RELIEF VALVE OPEN
LOW SUCTION PRESSURE
HIGH PUMP ROOM TEMPERATURE
LOW FIREWATER PRESSURE
LOW PURGE PRESSURE
LOW GEAR OIL PRESSURE
HIGH GEAR OIL TEMPERATURE
GAS DETECTION
HIGH VIBRATION
EMERGENCY POWER ON
PUMP ROOM DOOR OPEN

Data logging

The controller shall have separate data logs for storing system data that is readable through the OID.

Pressure Log: The controller shall have a Pressure log with continuous pressure recording of 30 days of data. The pressure log samples shall be time and date stamped and stored on a removable SD card memory. The pressure log shall be searchable by each sample, by minute, or by hour. Each days entries shall be stored in a separate file on the SD card. SD memory shall be readable by any PC equipped with an SD memory card reader.

Event Log: The event log shall be capable of storing no less than 3000 events. These events shall include, but is not limited to, any of the following events/alarms:

PUMP RUNNING
POWER AVAILABLE
PHASE REVERSAL
MOTOR OVERLOAD
REMOTE START
LOCAL START
PUMP ON DEMAND
SYSTEM FAULT
PRESSURE TRANSDUCER FAULT
PUMP FAILED TO START
LOW INTAKE SHUTDOWN ALARM
SUPERVISORY POWER FAILURE
LOW PRESSURE
AUTO WEEKLY TEST START
UNDER FREQUENCY
OVER FREQUENCY
LOW ZONE / HIGH ZONE CONTACTS
HIGH DISCHARGE PRESSURE
NO LOAD CONDITION

Each event or alarm recorded in the event log shall have the following data recorded with the event/alarm:

- Time and Date of Event or Alarm
- System Pressure
- Descriptive Text Message of the Event/Alarm
- Motor Running Status
- Phase to Phase Volts
- Phase Amps

The internal logic of the controller shall be capable of operation in a temperature range of 4.4ºC to 40ºC and high, non-condensing, humidity levels.

The controller shall be manufactured by Metron.